COPYRIGHT © 2005 MERIT INDUSTRIES, INC.

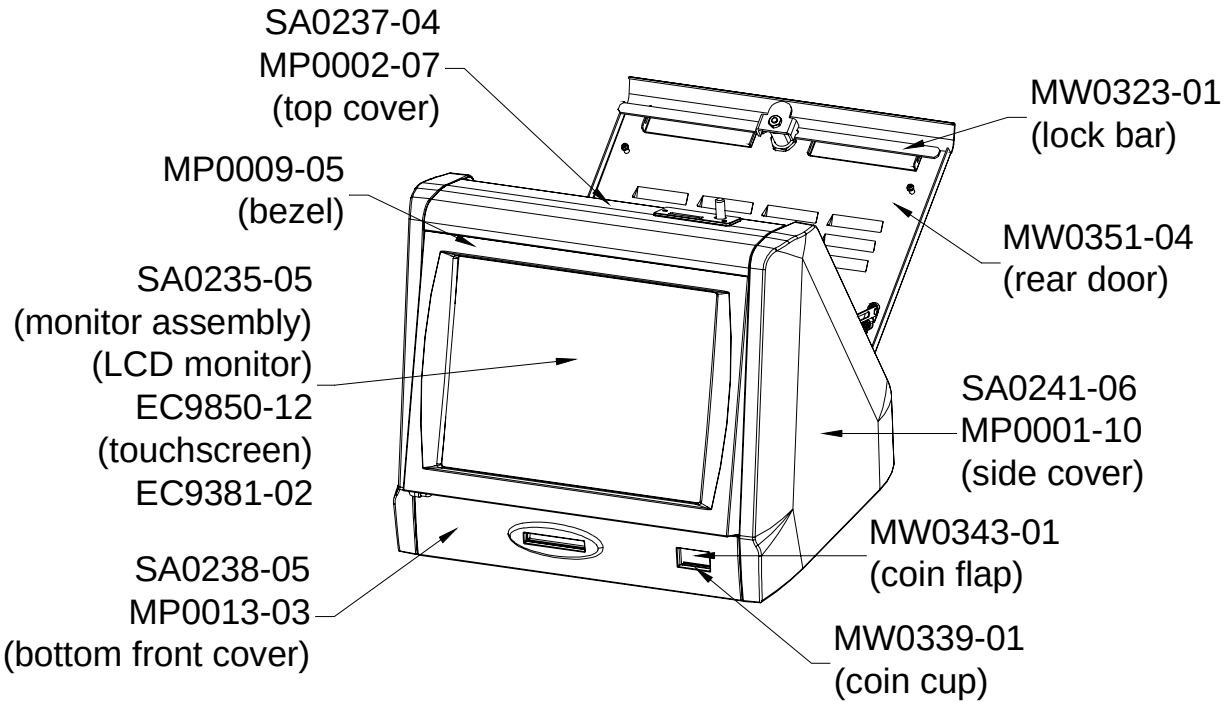
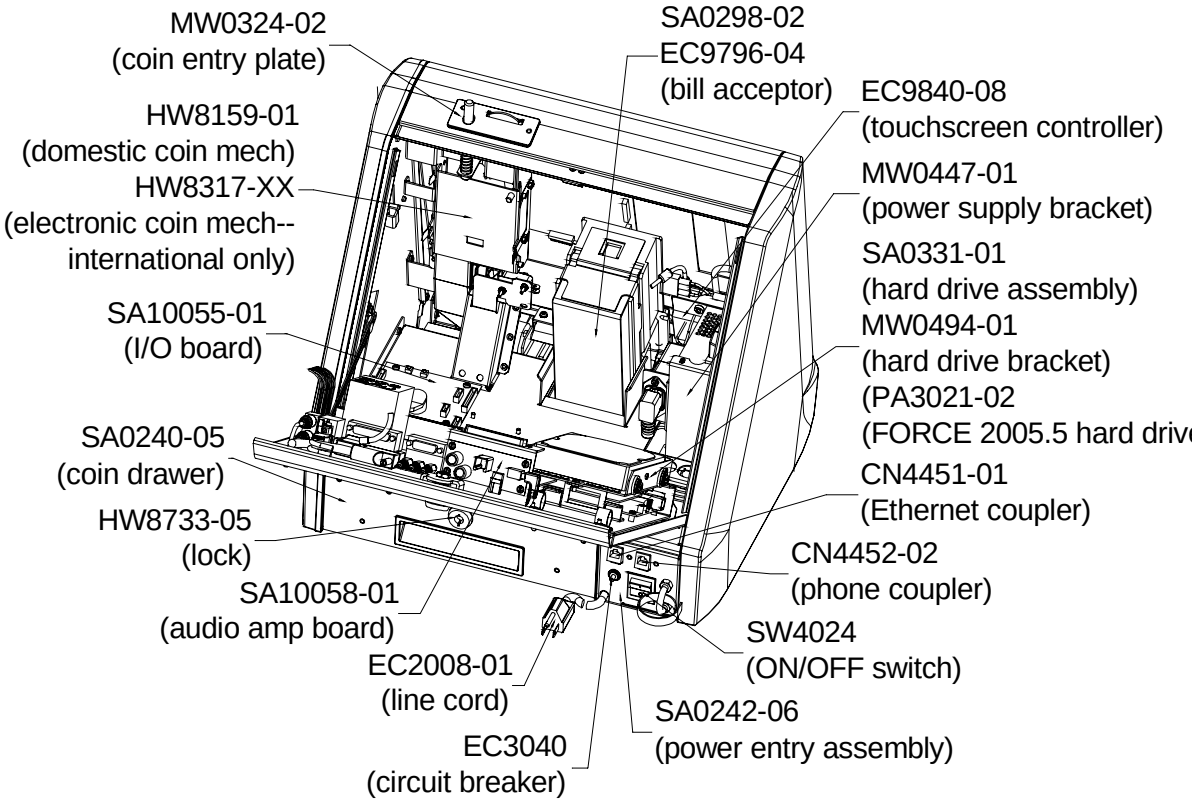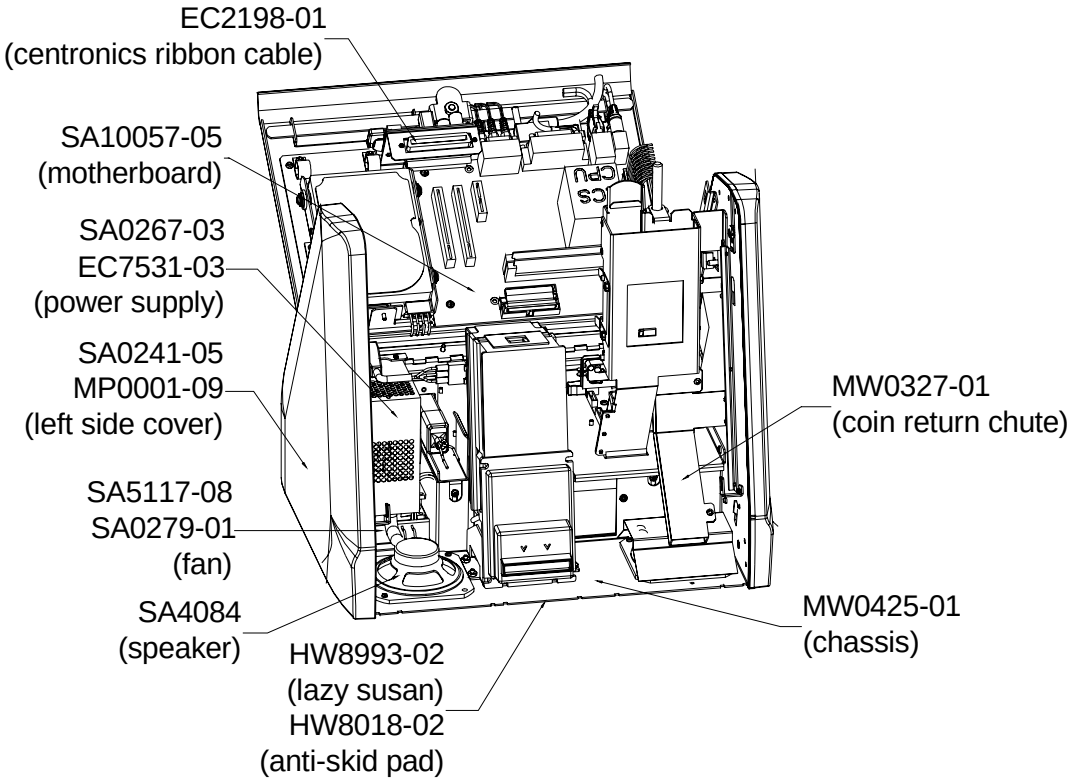
COPYRIGHT © 2005 MERIT INDUSTRIES, INC.